D²PAK

DIMENSIONS in millimeters and inches

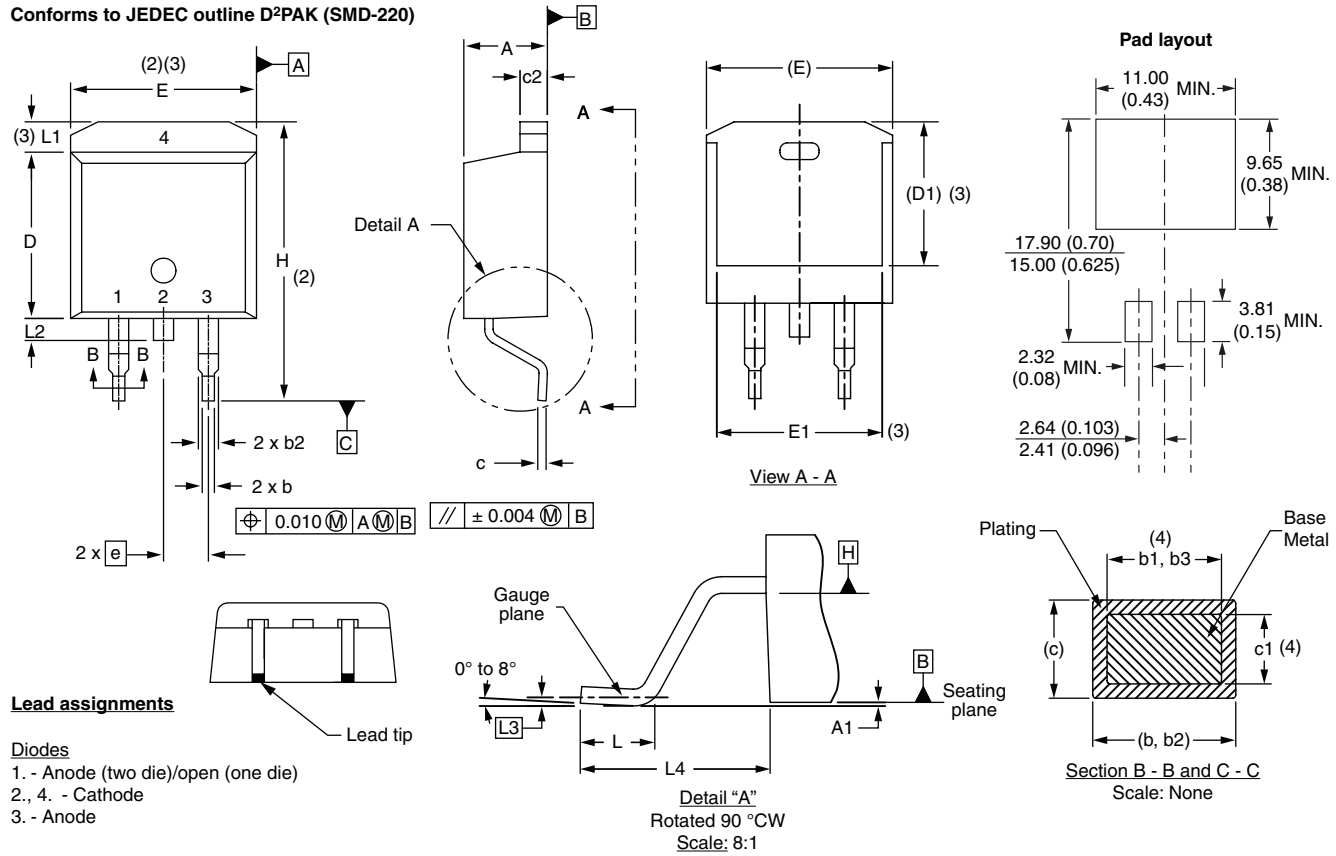

Lead assignments

Diodes
1. - Anode (two die)/open (one die)
2., 4. - Cathode
3. - Anode

SYMBOL	MILLIMETERS		INCHES		NOTES
	MIN.	MAX.	MIN.	MAX.	
A	4.06	4.83	0.160	0.190	
A1	0.00	0.254	0.000	0.010	
b	0.51	0.99	0.020	0.039	
b1	0.51	0.89	0.020	0.035	4
b2	1.14	1.78	0.045	0.070	
b3	1.14	1.73	0.045	0.068	4
c	0.38	0.74	0.015	0.029	
c1	0.38	0.58	0.015	0.023	4
c2	1.14	1.65	0.045	0.065	
D	8.51	9.65	0.335	0.380	2

SYMBOL	MILLIMETERS		INCHES		NOTES
	MIN.	MAX.	MIN.	MAX.	
D1	6.86	8.00	0.270	0.315	3
E	9.65	10.67	0.380	0.420	2, 3
E1	7.90	8.80	0.311	0.346	3
e	2.54 BSC		0.100 BSC		
H	14.61	15.88	0.575	0.625	
L	1.78	2.79	0.070	0.110	
L1	-	1.65	-	0.066	3
L2	1.27	1.78	0.050	0.070	
L3	0.25 BSC		0.010 BSC		
L4	4.78	5.28	0.188	0.208	

Notes

(1) Dimensioning and tolerancing per ASME Y14.5 M-1994
(2) Dimension D and E do not include mold flash. Mold flash shall not exceed 0.127 mm (0.005") per side. These dimensions are measured at the outmost extremes of the plastic body
(3) Thermal pad contour optional within dimension E, L1, D1 and E1
(4) Dimension b1 and c1 apply to base metal only
(5) Datum A and B to be determined at datum plane H
(6) Controlling dimension: inch
(7) Outline conforms to JEDEC outline TO-263AB